DESPIECE VENTILADOR ROWERG / D / E

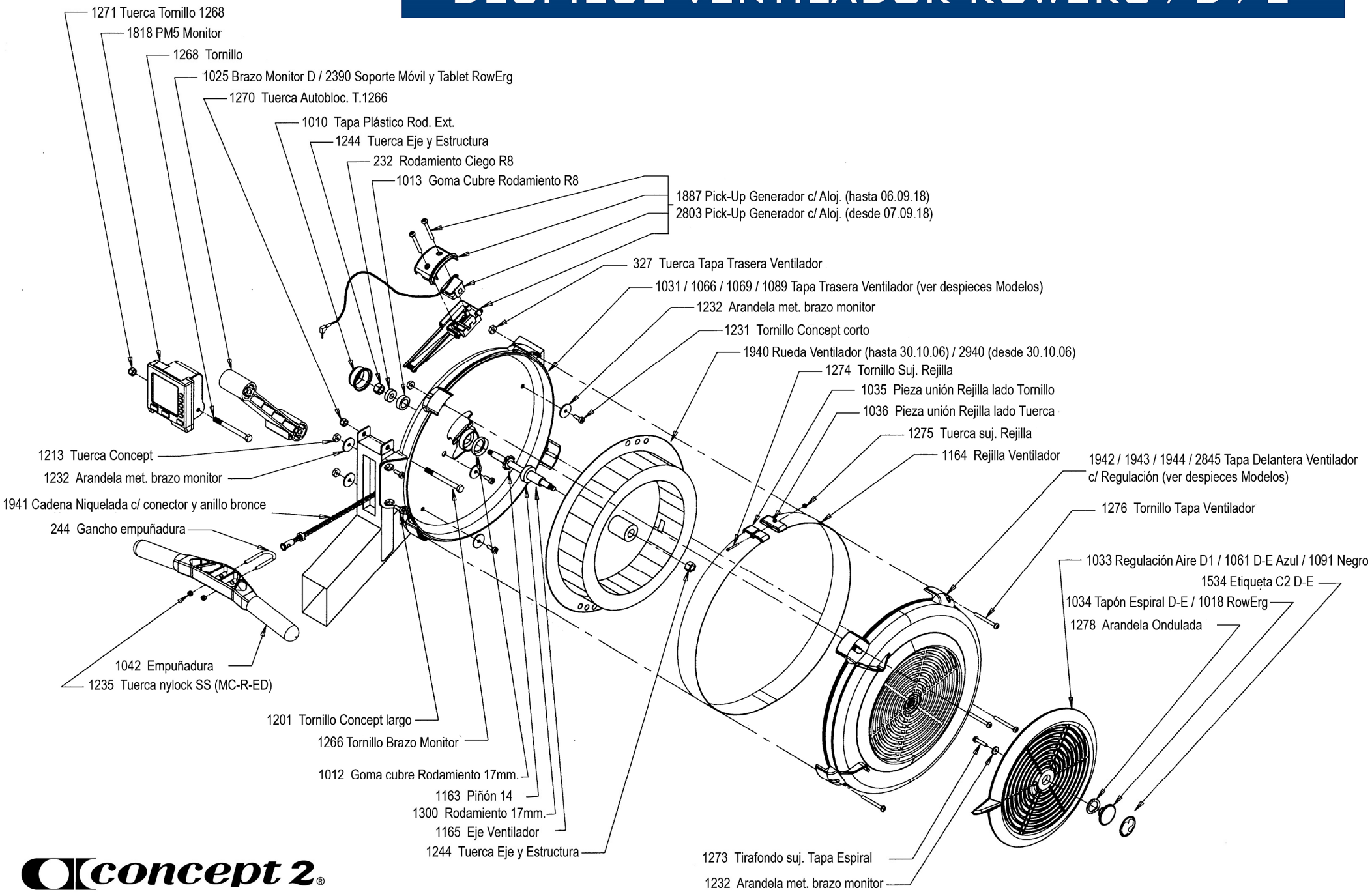

concept 2®
vermontC2.com